1% & 2% NIST, or STANDARD
2%, 3%, or 5%

5 Year Warranty

HWL

LCD display for easy reading

Deluxe Wall Humidity Sensors

HW Deluxe humidity transmitters provide an ideal solution for measuring relative humidity in all conditions. All devices are equipped with a thin-film capacitive sensor that is easily replaceable in the field. These sensors are calibrated to NIST standards, with certificates available.

The wall-mounted HW model features a low-profile housing with an LCD display for easy visibility. All Deluxe models come with an extended five-year warranty.

APPLICATIONS

- Managing energy systems
- Controlling HVAC systems for improved comfort and energy savings
- Museums, schools, printing shops, and other locations requiring humidity control
- Facilitating compliance with ASHRAE standards for environmental control and indoor air quality

Sense humidity in harsh environments

- Thin-film polymer capacitive sensor element recovers from 100% saturation
- Fully interchangeable element to 1%, 2%, 3%, or 5% accuracy. Calibration-free!
- Replace element in the field...maintain accuracy and minimize downtime

Easy Installation

- Polarity insensitive, two-wire 4-20mA, or 3-wire 0-5/0-10VDC versions...flexible systems compatibity...save time in the field, and stock fewer devices

Calibration-free interchangeable NIST traceable HS element

- HS element is microprocessor profiled with on-board nonvolatile memory
- Multi-point digital calibration to NIST standards
- NIST certification available
- Minimizes field calibration downtime

SPECIFICATIONS

HS Element	Digitally profiled thin-film capacitive (32 bit mathematics) U.S. Patent 5,844,138
Accuracy at 25°C from 10-80% RH*	±2%, 3%, or 5% models; ±1% at 12-60% RH in voltage output mode; ±1% at 12-60% RH in mA output mode with temp transmitter; ±1% at 20-40% RH in mA output mode (Multi-point calibration, NIST traceable)
Reset Rate**	24 hours
Stability	±1% @ 20°C (68°F) annually, for two years
Operating Humidity Range	0 to 100% RH (non-condensing)
Hysteresis	1.5% typical
Linearity	Included in accuracy spec.
Temperature Coefficient	±0.1% RH/°C above or below 25°C (typical)
Analog Output	4-20mA version: 2-wire, polarity insensitive, (clipped and capped) 0-5V/0-10V versions: 3-wire, observe polarity
Scaling	0-100% RH
Operating Temperature Range	10° to 35°C (50° to 95°F)
Input Power***	4-20mA version: loop powered 12-30VDC only, 30mA max. 0-5V/0-10V versions: 12-30VDC/24VAC, 15mA max.
Optional Temperature Transmitter Output	Digital, 4-20mA, (clipped and capped) or 0-5V/0-10V output; accuracy ±0.5°C (±1°F) typical
EMC Conformance – CE Option	EN 50081-1, EN 50082-1, EN 61000-4-4, EN 61000-4-5, EN 61000-4-3, ENV 50204, EN 61000-4-6

**Specified accuracy with 24VDC supplied power with rising humidity. RTD/Thermistors are not compensated for internal heating of product.*

***Reset Rate is the time required to recover to 50% RH after exposure to 90% RH for 24 hours.*

****One side of transformer secondary is connected to signal common, so an Isolation transformer or dedicated power supply may be required.*

Shielded cabling is required for conformance to EMC standards. Technical information is available from factory upon request or is available on our website: www.veris.com.

©2008 Veris Industries

APPLICATION/WIRING DIAGRAMS

HW Voltage Output (3-Wire, 0-5V/0-10V)

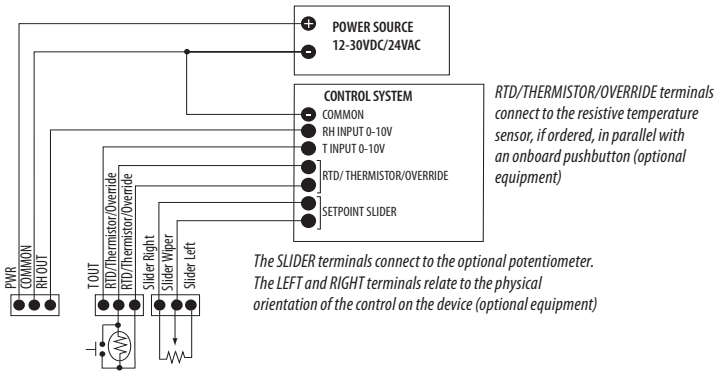

HW Current Output (2-Wire, 4-20mA)

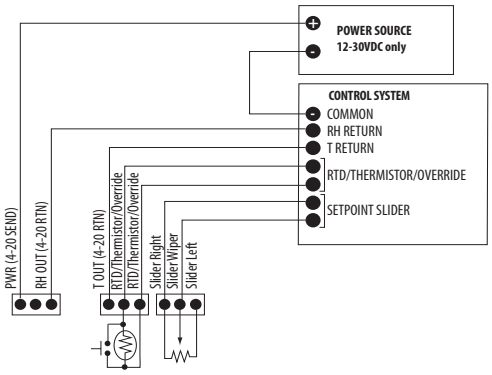

DIMENSIONAL DRAWING

HW

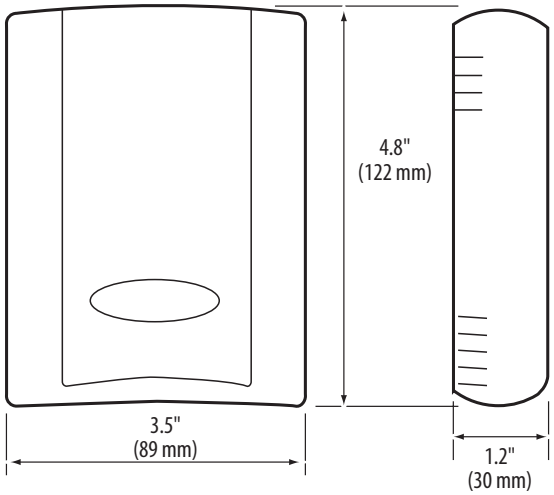

ORDERING INFORMATION

CE *Available*

HW [ ]

Display
- **L** = LCD
- **X** = No

Accuracy
- **1** = 1%
- **2** = 2%
- **3** = 3%
- **5** = 5%

NIST
- **N** = NIST (1% and 2% only)
- **X** = No (2%, 3%, and 5% only)

US or EU
- **S** = Standard
- **C** = CE

Temp.
- **T** = Temp*
- **X** = No Temp (Stop here)

Sensor Type
- **A** = Transmitter: 10° - 35°C (50° - 95°F), 0° - 50°C (32° - 122°F) *(switchable)*
- **B** = 100R Platinum, RTD
- **C** = 1k Platinum, RTD
- **D** = 10k T2, Thermistor
- **E** = 2.2k, Thermistor
- **F** = 3k, Thermistor
- **G** = 10k CPC, Thermistor
- **H** = 10k T3, Thermistor
- **J** = 10k Dale, Thermistor
- **K** = 10k with 11k shunt, Thermistor
- **M** = 20k NTC, Thermistor
- **N** = 1800 ohm TAC, Thermistor
- **Q** = 1uA/C, Linitemp
- **R** = 10k US, Thermistor
- **S** = 10k 3A 221
- **T** = 100k, Thermistor
- **U** = 20k "D", Thermistor

Options Available

Temp Cal Cert
- **X** = No Cert
- **1** = 1pt Cal
- **2** = 2pt Cal

Option
- **1** = Push Button Override
- **2** = Set Point Slider
- **3** = Push Button Override and Set Point Slider

Value
- **A** = 1k
- **F** = 10k
- **G** = 20k
- **K** = 50k
- **M** =100k

Examples:

HW	L	2	N	C	T	A	*Stop Here*			
HW	L	2	N	C	T	C	2	2	F	
HW	X	5	X	S	X					

**In order for unit to display both temp and RH, a temperature transmitter model must be ordered.*

ACCESSORIES

Replacement HS humidity element...see page 76.

©2008 Veris Industries